No.	DATE	DESCRIPTION	REV	REMARK : RoHS REQUIREMENT APPLIED (符合RoHS)	DATE	DRAWING NO.

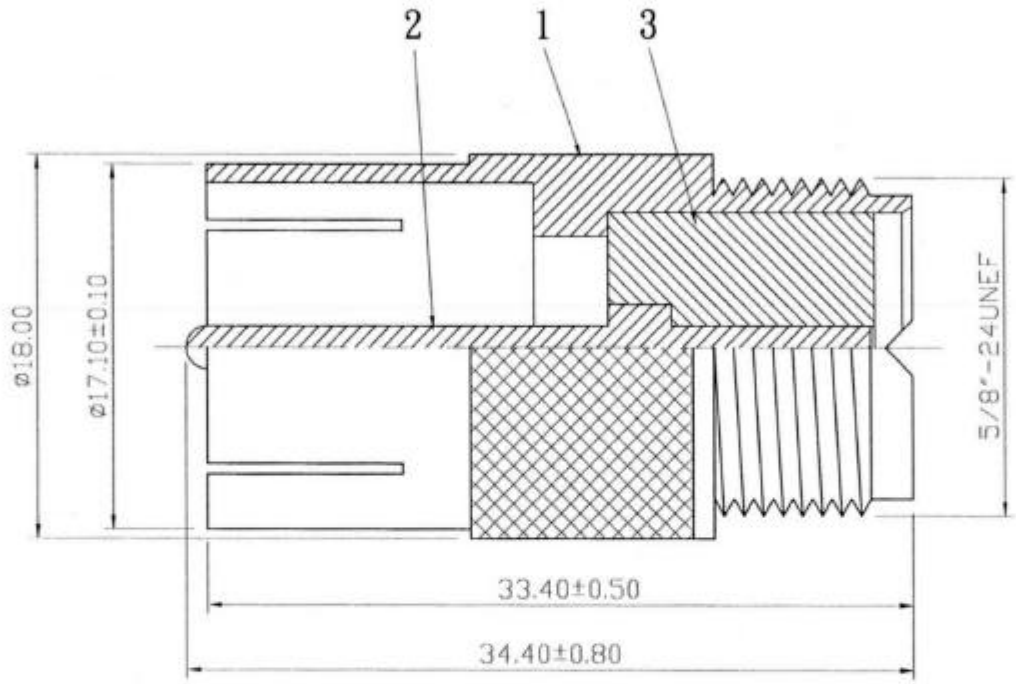

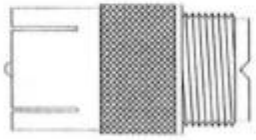

S1：1

NO.	Description	Unit	Materials	Finish	Drawing No.
7					
6					
5					
4					
3	insulator	1	delrin	white	
2	contact pin	1	brass	gold	
1	body	1	brass	nickel	

DIMENSIONS ARE IN MILLIMETERS

UNLESS OTHRWISE PECIFIED TOLERANCES
(一般公差)
0.5~6 = ±0.2
>6~30 = ±0.4
>30~120 = ±0.6
>120~315 = ±1
>315~1000 = ±1.6
ANGLES(角度) = ±5°

SCALE 3：1 UNIT MM

APPROVED 高逸群
CHECKED 吳碧桐
DRAWN Lala
DATE 2009. 04. 06

p/n CON QUHFMUHFF

TITLE
QUICK UHF MALE TO UHF FEMALE

DRAWING NO.
ADT-2715S-US10DA-US20DA

FILE NO. DRAWING\RF\ADT\ADT-2715S-US10DA-US20DA